MMS
Membrane Solutions

SW40 System

Tools enabling Innovation

Membrane Solutions for the Pilot Plant

Pilot Membrane System

The MMS SW40 pilot system is available in a wide range of configurations and can be equipped with different types of modules for test applications.

The SW40 is an easy to use pilot membrane device for microfiltration, ultrafiltration, nanofiltration and reverse osmosis operations.

Applications such as fractionation, purification and concentration of molecules can be tested.

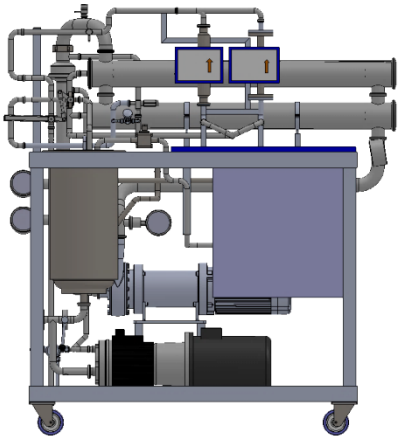

Example System 1
Spiral wound, PN64, manual mode

Key Features

- Manual, semi-automatic or fully automatic operation mode
- Speed control of pressure & circulation pumps for variable membrane crossflow velocity
- Operating pressures up to 64 bar
- Testing of spiral wound, ceramic, hollow fibre and tubular elements (wide range of membranes available)
- Multitube heat exchanger for temperature regulation
- HMI interface with data logging

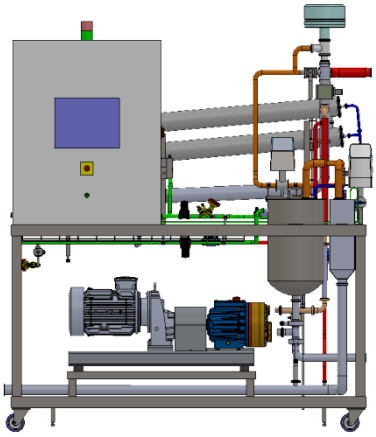

Example System 2
Spiral wound, PN64, semi-automatic

MMS
Membrane Solutions

SW40 System

Tools enabling Innovation

Applications

Food & Extract Sector

- Protein fractionation & concentration
- Extract fractionation & concentration
- Hydrolysate fractionation & concentration
- Sugar fractionation & concentration
- De-alcoholization of beer and wine
- Soya milk de-bittering

Bio-Pharmaceutical Sector

- Fermentation broth clarification
- Enzyme & protein concentration
- Peptide concentration & de-salting
- API purification & concentration
- Oligosaccharide purification & concentration
- Solvent recovery or exchange

Natural Oils Sector

- De-waxing
- De-colourization
- Purification
- Concentration
- Oil/water separation

Aroma and Colorant Sector

- Herbal extract fractionation & concentration
- Natural colour purification & concentration
- Aroma sterilization
- Aroma concentration
- Evaporator condensate treatment

Chemical Sector

- Acid/caustic recovery
- Catalyst separation
- Solvent exchange & recovery
- Polymer purification & concentration
- Condensate water purification

Biofuels Sector

- Organic acid clarification & purification
- Organic acid concentration
- Sugar clarification & concentration
- Ethanol purification
- Condensate water recovery

Example System 3
Spiral wound or ceramic, PN8, semi-automatic mode

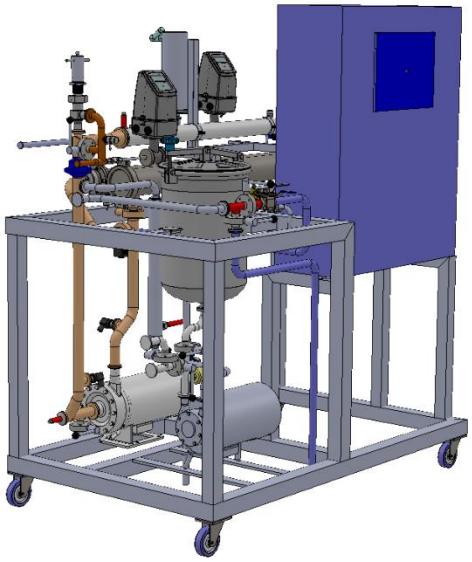

MMS
Membrane Solutions

SW40 System

Tools enabling Innovation

Specifications (Standard Version)

Dimensions (L x W x H)	1600 x 1000 x 1600 (mm), frame mounted on wheels
Weight	300 kg
Installed power requirement	~8 kW (400V/50Hz)
Membrane type	Spiral wound 3838/3840 module (other membrane types available)
Membrane area	3.5 - 7 m^2 (spiral wound) per module
Pressure pump	High pressure pump (speed controlled), with CIP and SIP capability
Circulation pump	Centrifugal pump (speed controlled)
Permeate flow rate	Permeate flow 35 – 140 l/h (flow rate is dependent on the feed characteristics)
Flow rate	Feed flow 1.8 m3/h, circulation flow up to 15 m3/h (dependent on configuration)
Tubing	All tubing and fittings Mat. 316 L
CIP tank	Stainless steel 316L, Volume 25 l
Dead volume	15 – 25 l (dependent on module used)
Instruments	2 x Pressure transducers (0 – 50 bar) 1 x Temperature transducer (0 – 100 °C) 1 x Flow meter (magnetic), on permeate side
Gaskets, Seals & O-rings	EPDM (others on request)
Pressure rating	PN40 (PN64 on request)
Temperature rating	5 – 80 °C (external cooling/heating source required)
Operation mode	manual
HMI	Touch panel for process control, indication of parameters and data logging

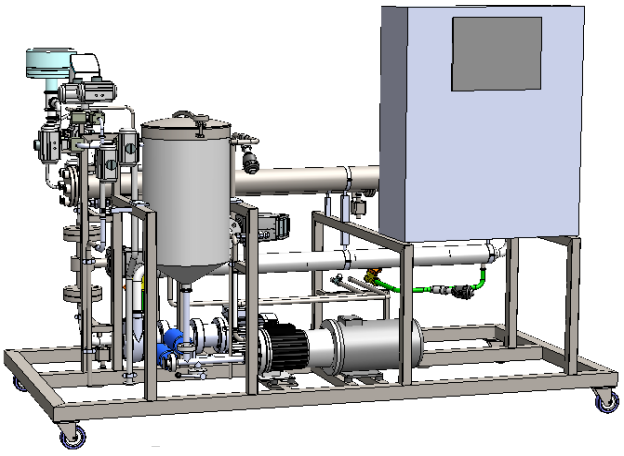

Example System 4
Spiral wound or ceramic, PN64,
semi-automatic mode

MMS
Membrane Solutions

SW40 System

Tools enabling Innovation

Options

Diafiltration Kit

A peristaltic pump, integrated into the control unit, can be used for continuous diafiltration process.

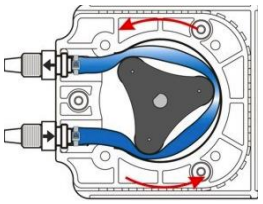

External Tanks

Tanks for feed, retentate and permeate are available in different configurations (volume, jacketed, stirrer).

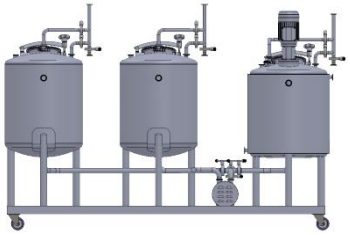

Different Modules

SW	Spiral wound modules 3838/3840
HF	Hollow fibre modules 3” – 4”
Ceram	Ceramic 25 - 41 mm elements
Tub	Tubular modules (on request)

Membrane Cut-Offs (exemplary)

SW Microfiltration	0.1, 0.2, 0.3 µm
SW Ultrafiltration	2.5, 3.5, 5, 10, 20, 50 kDa
SW Nanofiltration	150 Da, 300 Da, 1000 Da
SW Reverse Osmosis	93% & 99% NaCl rejection
HF Microfiltration	0.2 & 0.5 µm
HF Ultrafiltration	10, 30, 50 & 150 kDa
Ceramic - Microfiltration	0.1, 0.2, 0.45, 0.8, 1.4 µm
Ceramic - Ultrafiltration	15, 50, 150, 300 kDa
Ceramic - Nanofiltration	500 Da, 700 Da, 1000 Da